# 中文AWO/D 41410

# 程序表

**A.**「開門」指示燈

本洗衣機配備自動安全功能，可在早期測出和診斷故障並適當進行處理，例如:

**B.**「服務」指示燈

**C.**「水龍頭關閉」指示燈

**D.**「清潔泵」指示燈

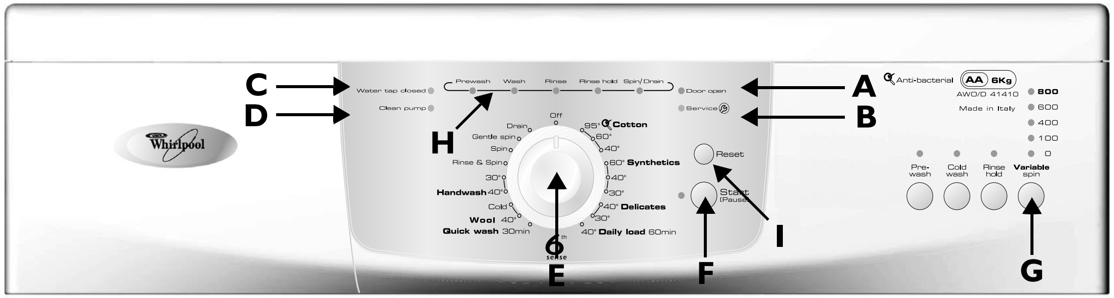


**E.** 程序選擇旋鈕

**F.**「開始 / 暫停」按鈕

**G.** 脫水轉速選擇器

**H.** 程序步驟指示燈

**I.**「復位」按鈕

| 程序 | | 護理標簽 | 最大洗衣量 公斤 | 衣物類型 / 備註<br>- *溫度的選擇請遵循護理標簽上製造商的建議* | 洗衣劑及添加劑 預洗 | 洗衣劑及添加劑 主洗 | 洗衣劑及添加劑 柔順劑 | 特別功能 預洗 *Pre-wash* | 特別功能 冷洗 *Cold wash* | 特別功能 延遲脫水 *Rinse hold* | 特別功能 脫水降速 ***Variable** spin* | 最大脫水轉速 轉 / 分鐘 |
|---|---|---|---|---|---|---|---|---|---|---|---|---|
| 棉質 / 防菌<br>*60 - 95 °C* | **Cotton / Antibacterial**<br>*60 - 95 °C* | 95 60 | 6.0 | 一般至非常肮髒之床單、桌布及內衣褲、毛巾、襯衫等棉麻衣物。<br>選擇 「Cotton 95」，此程序可消滅細菌，確保衣物衛生。細菌消滅效能通過 2001 年 11 月 NF EN 13697 標準的類似方式測試。<br>*非常肮髒的衣物可加選 「預洗」 功能。* | ✻ | 是 | ✻ | ✻ | ✻ | ✻ | ✻ | 800 |
| 棉質<br>*40 °C* | **Cotton**<br>*40 °C* | 40 | 5.0 | | | | | | | | | |
| 合成纖維<br>*30 - 40 - 60 °C* | **Synthetics**<br>*30 - 40 - 60 °C* | 60 50 40 30 | 2.5 | 一般至非常肮髒之男女襯衫、罩衫等滌綸 ( 迪奥綸、特雷維拉 )、錦綸 ( 貝龍、尼龍 ) 或混棉織物。 | ✻ | 是 | ✻ | ✻ | ✻ | ✻ | ✻ | 800 1) |
| 纖細衣物<br>*30 - 40 °C* | **Delicates**<br>*30 - 40 °C* | 40 30 | 1.5 | 窗簾與質料纖細之連身裙、半截裙及男女襯衫等衣物。 | ✻ | 是 | ✻ | ✻ | ✻ | ✻ | ✻ | 800 1) |
| 日常衣物 60 分鐘<br>*40 °C* | **Daily load** 60min<br>*40 °C* | 60 40 60 40 | 3.0 | 輕微到一般肮髒之棉質和 / 或合成纖維衣物。 | — | 是 | ✻ | — | ✻ | ✻ | ✻ | 800 |
| 快洗 30 分鐘<br>*30 °C* | **Quick wash** 30min<br>*30 °C* | 30 | 3.0 | 穿著時間短之外衣等棉質、滌綸、錦綸及混棉織物。 | — | 是 | ✻ | — | ✻ | ✻ | ✻ | 800 |
| 羊毛<br>*冷水 - 40 °C* | **Wool**<br>*Cold - 40 °C* | | 1.0 | 只可洗滌經無氈整理、有羊毛標記並標明可機洗的羊毛衣物。<br>*如選擇了 「延遲脫水」 功能，切勿讓衣物浸泡過久。* | — | 是 | ✻ | — | ✻ | ✻ | ✻ | 800 1) |
| 手洗<br>*30 - 40 °C* | **Handwash**<br>*30 - 40 °C* | 40 30 | 1.0 | 有 「手洗」 標記之絲、麻、羊毛及人造絲織物。<br>*如選擇了 「延遲脫水」 功能，切勿讓衣物浸泡過久。此程序使用輕柔脫水。* | — | 是 | ✻ | — | ✻ | ✻ | ✻ | 400 2) |
| 過水及脫水 | Rinse & Spin | — | 6.0 | *與 「棉質」 程序的最後一次過水及最後脫水相同。* | — | — | ✻ | — | — | ✻ | ✻ | 800 |
| 脫水 | Spin | — | 6.0 | *此程序進行強力脫水。與 「棉質」 程序的脫水步驟相同。* | — | — | — | — | — | — | ✻ | 800 |
| 輕柔脫水 | Gentle Spin | — | 1.0 | *此程序進行輕柔脫水。與 「羊毛」 程序的脫水步驟相同。* | — | — | — | — | — | — | ✻ | 800 1) |
| 排水 | Drain | — | — | *僅排水，不脫水。* | — | — | — | — | — | — | — | — |

✻: 可選擇 / 是：須放入洗衣劑

1) 爲更好地護理衣物，此程序的脫水轉速限制在 800 轉 / 分鍾。

2) 爲更好地護理衣物，此程序的脫水轉速限制在 400 轉 / 分鍾。

Whirlpool is a registered trademark of Whirlpool USA

**5019 301 05991**

## 水電消耗資料表

| 程序 | 溫度<br>(°C) | 洗衣量<br>( 公斤 ) | 耗水量<br>( 公升 ) | 耗電量<br>( 千瓦 / 小時 ) | 大約 程序 時間<br>( 小時 : 分鐘 )* |
|---|---|---|---|---|---|
| 棉質 / 防菌 | 95 | 6.0 | 59** | 1.90 | 2:00 |
| 棉質 *** | 60 | 6.0 | 49 | 1.14 | 2:10 |
| 棉質 | 40 | 5.0 | 56 | 0.70 | 2:00 |
| 合成纖維 | 60 | 2.5 | 50** | 0.80 | 1:35 |
| 合成纖維 | 40 | 2.5 | 46 | 0.50 | 1:20 |
| 纖細衣物 | 30 | 1.5 | 60 | 0.50 | 0:45 |
| 日常衣物 60 分鐘 | 40 | 3.0 | 41 | 0.50 | 1:00 |
| 快洗 30 分鐘 | 30 | 3.0 | 41 | 0.40 | 0:30 |
| 羊毛 | 40 | 1.0 | 60 | 0.50 | 0:45 |
| 手洗 | 40 | 1.0 | 45 | 0.50 | 0:40 |

上表中的能源消耗資料，是根據 IEC/EN 60 456 標準所規定的正常條件下測量而獲得。由於供水壓力和溫度以及洗衣量和衣物類型的不同，各家庭的能源消耗與上表中的資料可能會有不同。

* 剩餘時間顯示器也可能與表中所列數值有所偏差，因爲剩餘時間按洗衣時的家庭實際情況計算。

** 爲在水泵排水前降低水溫，主洗步驟結束時會加入一些冷水。

*** 能源標簽的參考程序。

## 添加洗衣劑，關閉機門並選擇程序

按前頁所示和 「使用說明書」所述添加洗衣劑。關閉機門，並將 程序選擇旋鈕 轉到所需程序及溫度。「開始 / 暫停」按鈕旁邊的指示燈閃爍。

## 選擇所需的特別功能

按下所需的任何特別功能按鈕時，相應的指示燈發亮。

如果程序與附加功能的組合不可能時，指示燈自動熄滅。不適當的功能組合自動取消。

「預洗」按鈕

- 僅適用於非常骯髒的衣物（例如含泥沙、汙粒）。洗衣時間約增加 15 分鐘。

「冷洗」按鈕

- 水只加熱到 20°C。
- 適合護理標簽上建議的洗衣溫度最高爲 30° 的纖細衣物。
- 只可在每一程序的最低溫度步驟選擇。

「延遲脫水」按鈕

- 衣物保留在最後一次過水的水中，不進行最後脫水步驟，以防衣物起皺及變色。
- 建議採用「合成纖維」、「日常衣物」或「纖細衣物」程序時加選此功能。
- 如您想延遲脫水或只想排水時，此功能格外有用。

  備註：程序步驟顯示器的 「防皺」指示燈發亮時，程序在 「延遲脫水」時停止。「開始 / 暫停」按鈕旁邊的指示燈閃爍。
- 如選擇了 「延遲脫水」，切勿讓衣物浸泡過久。

結束 「延遲脫水」功能：

- 按下「開始 / 暫停」按鈕，洗衣機將運行當前洗衣程序的最後脫水步驟而自動結束程序。
- 如果您不想將衣物脫水，將程序選擇旋鈕轉到「排水」程序並按下 「開始 / 暫停」按鈕。

「脫水降速」按鈕

- 每一程序均有一個預設的脫水轉速。
- 按此按鈕以另設脫水轉速。
- 如選擇的脫水轉速爲 「0」，最後一次脫水將會取消，但過水時的最高速間隔脫水仍會保留。水只被排走。

## 程序表

打開水龍頭並按下 「開始 / 暫停」按鈕。

「開始 / 暫停」按鈕旁邊的指示燈發亮。程序步驟指示燈顯示當前的程序步驟，從左到右移動，依次進行洗衣、過水及脫水 / 排水。

- 當一個程序步驟結束時，相應指示燈熄滅。

## 「開門」指示燈

開始一個程序前和結束一個程序後，指示燈發亮表示可以打開機門。洗衣程序運行期間，機門保持鎖閉，決不能強行打開。如果在洗衣程序運行期間您急需打開機門，請參閱「結束前取消 ( 復位 ) 運行中的程序」。

## 紅色指示燈

「服務」

「服務」指示燈的發亮可能是由一個電子元件的故障所引起。請參閱「使用說明書」的「故障排除指引」；如果故障依然存在，請聯絡我們的售後服務中心。

「水龍頭關閉」

洗衣機無水供應或供應不足。 打開水龍頭；如果指示燈 仍發亮，請查閱 「使用說明書」中的「故障排除指引」。

「清潔泵」

廢水未泵出。檢查排水軟管是否扭曲或過濾器是否需要清潔；在後一種情況請查閱「使用說明書」（「拆除過濾器」）。

## 程序結束

- 所有程序步驟指示燈均熄滅，而 「開門」指示燈發亮。

1. 將程序選擇旋鈕轉到 「Off/O」位置。
2. 關閉水龍頭。
3. 打開機門並取出衣物。
4. 讓機門微開，令洗衣鼓乾燥。

## 程序開始後改變程序及 / 或特別功能

1. 按下 「開始 / 暫停」按鈕以暫停程序。指示燈閃爍。
2. 選擇新程序（連同溫度）和任何特別功能，如需要的話也可選另一脫水轉速。
3. 再次按下 「開始 / 暫停」按鈕。新程序在先前的程序中斷之處繼續進行。此程序無需添加洗衣劑。

## 結束前取消 ( 復位 ) 運行中的程序

「復位」按鈕在結束前取消程序。

- 按住 「復位」按鈕至少 3 秒。在機門可被打開前機內所有的水被排出。

Whirlpool is a registered trademark of Whirlpool USA

30105991GB.fm Page 1 Wednesday, December 27, 2006 6:23 PM

# GB AWO/D 41410 PROGRAMME CHART

**A. “Door open” indication**

**This washing machine is equipped with automatic safety functions which detect and diagnose faults at an early stage and react appropriately, e.g.:**

**B. “Service” indication**
**C. “Water tap closed” indication**
**D. “Clean pump” indication**

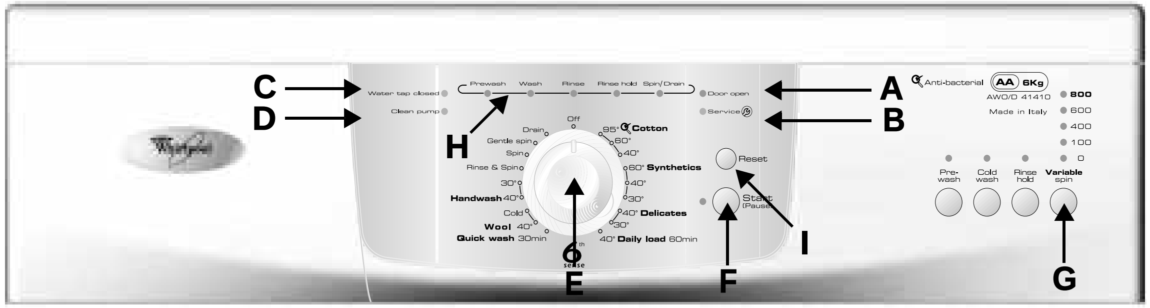


**E. Programme selector**
**F. “Start/Pause” button**
**G. Spin speed selector**
**H. Programme sequence indicator**

**I. “Reset” button**

| Programme | Care Labels | Max Load kg | Type of wash/Notes - *For temperature selection, respect the manufacturer’s recommendations on the care label* | Detergents and additives: Pre-wash | Detergents and additives: Main Wash | Detergents and additives: Softener | Special options: Pre-wash | Special options: Cold wash | Special options: Rinse hold | Special options: **Variable** spin | Max Spin Speed rpm |
|---|---|---|---|---|---|---|---|---|---|---|---|
| **Cotton / Antibacterial** *60 - 95 °C* | 95 60 | 6.0 | Normally to heavily soiled bed linen, table linen and underwear, towels, shirts etc. made of cotton and linen. Selecting “Cotton 95”, this programme eliminates bacteria, ensuring sanitization of your laundry. The bacteria removal efficiency has been tested following a similar methodology to the NF EN 13697 standard of Nov. 2001. *With heavily soiled laundry the additional “Prewash” option can be selected as well.* | ❇ | Yes | ❇ | ❇ | ❇ | ❇ | ❇ | 800 |
| **Cotton** *40 °C* | 40 | 5.0 | | | | | | | | | |
| **Synthetics** *30 - 40 - 60 °C* | 60 50 40 30 | 2.5 | Normally soiled blouses, shirts, overalls etc. made of polyester (Diolen, Trevira), polyamide (Perlon, Nylon) or blends with cotton. | ❇ | Yes | ❇ | ❇ | ❇ | ❇ | ❇ | 800 1) |
| **Delicates** *30 - 40 °C* | 40 30 | 1.5 | Curtains and delicate clothing, dresses skirts, shirts and blouses. | ❇ | Yes | ❇ | ❇ | ❇ | ❇ | ❇ | 800 1) |
| **Daily load** 60min *40 °C* | 60 40 60 40 | 3.0 | Slightly to normally soiled textiles made of cotton and/or synthetics. | — | Yes | ❇ | — | ❇ | ❇ | ❇ | 800 |
| **Quick wash** 30min *30 °C* | 30 | 3.0 | Shortly worn outer clothing made of cotton, polyester, polyamide and blends with cotton. | — | Yes | ❇ | — | ❇ | ❇ | ❇ | 800 |
| **Wool** *Cold - 40 °C* | | 1.0 | Only woollens with a felt-free finish, labelled with the woolmark and identified as machine washable. *If you select “Rinse Hold” do not leave items to soak for too long.* | — | Yes | ❇ | — | ❇ | ❇ | ❇ | 800 1) |
| **Handwash** *30 - 40 °C* | 40 30 | 1.0 | Textiles made of linen, silk, wool and viscose marked as “handwashable”. *If you select “Rinse Hold” do not leave items to soak for too long. A very gentle spin is used in this programme.* | — | Yes | ❇ | — | ❇ | ❇ | ❇ | 400 2) |
| Rinse & Spin | — | 6.0 | *Same as the last rinse and the final spin in the “Cotton” programme.* | — | — | ❇ | — | — | ❇ | ❇ | 800 |
| Spin | — | 6.0 | *In this programme spinning is intensive. Same as the spin cycle in the “Cotton” programme.* | — | — | — | — | — | — | ❇ | 800 |
| Gentle Spin | — | 1.0 | *In this programme spinning is gentle. Same as the spin cycle in the “Wool” programme.* | — | — | — | — | — | — | ❇ | 800 1) |
| Drain | — | — | *Water is drained only without any spinning.* | — | — | — | — | — | — | — | — |

❇: optional / Yes : dosing required
1) For improved garment care, spin speed is restricted to 800 rpm in this programme.
2) For improved garment care, spin speed is restricted to 400 rpm in this programme.

Whirlpool is a registered trademark of Whirlpool USA

**5019 301 05991**

Black process 45.0° 100.0 LPI

## CONSUMPTION DATA

| Programme | Temperature (°C) | Load (kg) | Water (l) | Energy (kWh) | Approx. Programme Duration (hours : minutes)* |
|---|---|---|---|---|---|
| Cotton / Antibacterial | 95 | 6.0 | 59** | 1.90 | 2:00 |
| Cotton*** | 60 | 6.0 | 49 | 1.14 | 2:10 |
| Cotton | 40 | 5.0 | 56 | 0.70 | 2:00 |
| Synthetics | 60 | 2.5 | 50** | 0.80 | 1:35 |
| Synthetics | 40 | 2.5 | 46 | 0.50 | 1:20 |
| Delicates | 30 | 1.5 | 60 | 0.50 | 0:45 |
| Daily load 60min | 40 | 3.0 | 41 | 0.50 | 1:00 |
| Quick wash 30min | 30 | 3.0 | 41 | 0.40 | 0:30 |
| Wool | 40 | 1.0 | 60 | 0.50 | 0:45 |
| Handwash | 40 | 1.0 | 45 | 0.50 | 0:40 |

Consumption values were measured in normalized conditions in compliance with Standard IEC/EN 60 456. Consumption data in the home may vary with respect to the values in the table in relation to the water supply pressure and temperature, the load and the type of wash.

* The remaining time indicator can deviate from the values in the table, because it takes into account the household conditions applicable at that time.

** To reduce the water temperature, some cold water is added at the end of the main wash cycle, before the pump drains the water out.

*** Reference Programme for Energy Label.

## ADD DETERGENTS, CLOSE THE DOOR AND SELECT THE PROGRAMME

Add detergent as indicated on the front page and as described in your Instructions for Use. Close the door and turn the **programme selector** to the desired programme and temperature. The indication lamp next to the **“Start/Pause”** button flashes.

## SELECT ANY DESIRED OPTION

Push the button(s) of any option(s) desired - the respective indication lamp lights up.

When the combination of programme and additional option(s) is not possible, the indication lights switch off automatically. Unsuitable combinations of options are deselected automatically.

**“Prewash” button**

- Only for heavily soiled loads (for example sand, granular dirt) sensible. Increases the cycle time by approximately 15 min.

**“Cold wash” button**

- Water is heated only up to 20°C
- Suitable for delicate laundry items with wash temperature recommendation of max. 30° on the care label.
- Selectable only on the lowest temperature step of each programme.

**“Rinse hold” button**

- The laundry remains in the last rinse water without progressing to the final spin cycle to avoid creasing and prevent colours from changing.
- This option is particularly recommended for the programmes “Synthetics”, “Daily load” and “Delicates”.
- This function is particularly useful if you want to postpone spinning to a later time, or if you want to drain only.
  **Note:** The programme stops to “Rinse hold” at the time the “Anticrease” light in the programme sequence indicator is on. The indication lamp next to the **“Start/Pause”** button flashes.
- If you select “Rinse Hold”, do not leave the laundry items to soak for too long.

**Terminate the “Rinse hold” option:**

- Press the **“Start/Pause”** button; the programme will terminate automatically with the final spin cycle for the present wash programme.
- If you do not wish to spin the clothes, turn the programme selector knob to the “Drain” programme and press the **“Start/Pause”** button.

**“Variable spin” button**

- Every programme has a predefined spin speed.
- Press the button to set another spin speed.
- If spin speed “0” is selected, the final spinning is cancelled but intermediate spin peaks remain during rinse. The water is drained out only.

## PROGRAMME START

Open the tap and press the **“Start/Pause”** button. The indication lamp next to the **“Start/Pause”** button lights up. The programme sequence indicator shows the current programme phase, running from left to right through Wash, Rinse, Spin/Drain.

- When the programme phase is finished, the corresponding indication goes out.

## “DOOR OPEN” INDICATION

Before starting and after end of a programme, the lamp lights to show that the door can be opened. As long as a wash programme is running, the door remains locked and must on no account be forced open. In case you have an urgent need to open it during a running programme, refer to “Cancel (Reset) a running programme before the end”.

## RED INDICATIONS

**“Service”**

Lighting up of the “Service” indication can be caused by a fault in an electrical component. Refer to the “Troubleshooting Guide” in your Instructions for Use; if the fault persists, contact our After Sales Service.

**“Water tap closed”**

The appliance has no or insufficient water supply. Open the water tap; if the indication still lights up, refer to the “Troubleshooting Guide” in the Instructions for Use.

**“Clean pump”**

Waste water is not pumped out. Check whether the drain hose is kinked or the filter must be cleaned; in the latter case refer to the Instructions for Use (“Removing the Filter”).

## PROGRAMME END

- All the lights of the programme sequence indicator are off, and the “Door open” indication lights up.

1. Turn the programme selector to the “Off/O” position.
2. Close the water tap.
3. Open the door and unload the machine.
4. Leave the door ajar to allow the drum to dry.

## CHANGE PROGRAMME AND/OR OPTIONS AFTER PROGRAMME START

1. Press the **“Start/Pause”** button to pause the programme. The light flashes.
2. Select the new programme (with temperature), any options and another spin speed if you want.
3. Press the **“Start/Pause”** button again. The new programme continues at the same position where the previous programme was interrupted. Do not add detergent for this programme.

## CANCEL (RESET) A RUNNING PROGRAMME BEFORE THE END

The **“Reset”** button cancels a programme before the end.

- Press the **“Reset”** button for at least 3 seconds. Any existing water is drained out before the door can be opened.

Whirlpool is a registered trademark of Whirlpool USA

5019 301 05991

# 目錄

使用洗衣機前

注意事項及綜合建議

洗衣機圖解

機門

兒童安全

初次洗衣前

洗衣準備

洗衣劑和添加劑

拆除過濾器 / 排出積水

保養和維護

故障排除指南

售後服務

配件

搬運 / 處理

# 使用洗衣機前

## 1. 拆除包裝並檢查

- 拆除包裝後，確定洗衣機無損。如有疑問，請勿使用洗衣機。請聯絡售後服務中心或當地經銷商。
- 確定具有所有配件和隨附的部件。
- 包裝材料 （塑膠袋、聚苯乙烯部件等）可能會對兒童造成危險，應存放在兒童無法觸及的地方。
- 若洗衣機在裝運前曝露於冷空氣中，請讓它處於室溫數小時後才開始操作。

## 2. 拆除搬運螺栓

- 本洗衣機配備搬運螺絲，以防搬運時造成洗衣機內部損毀。使用洗衣機前，請務必拆除搬運螺栓。
- 拆除螺栓之後，用 4 個密封塑膠蓋將開口處蓋緊。

## 3. 安裝洗衣機

- 拆除控制板上的保護膠薄膜（視乎機型而定）。
- 移動洗衣機時不要提拉其頂板。
- 將洗衣機安裝於堅固平穩的地面上，最好是室內的角落。
- 確定所有的四個機腳穩固置於地板上，然後檢查洗衣機完全水平 （可使用水平儀測量）。
- 若是木制地板或稱爲 " 浮動地板 "（例如，某些鑲木地板或薄板覆蓋的地板）上，請將洗衣機放置在緊壓地板和厚度至少 3 公分的 60 x 60 公分夾板上。

## 4. 水源

- 根據當地供水公司的規定連接進水軟管。
- 水源： 僅用冷水 （若您的程序圖表上未提供其他資訊）
- 水龍頭： 3/4 英吋螺紋供水管接頭
- 水壓（水流壓力）： 100-1000 kPa (1-10 bar)。
- 僅使用新的軟管將洗衣機連接到水源。請勿使用用過的軟管且應將它丟棄。

## 5. 排水

- 將排水軟管連接到虹吸管上或利用提供的 "U" 形管托將之挂在洗滌槽邊緣。
- 若將洗衣機連接到內嵌排水系統，請確定該系統配備排水口，以避免同時排水和進水（虹吸效應）。

## 6. 電源連接

- 電源連接必須由持證技工遵循製造廠商指示和現行的標準安全法規執行。
- 關於電壓、電源消耗及保險絲要求的資料在機門內標明。
- 本機必須透過接地符合現行法規的插座來連接電源。本機必須依法連接接地線。若因不遵循上述指示而導致財產損失或對人身或動物造成傷害，製造廠商將不負任何責任。
- 請勿使用延伸電源線或多用途插座。
- 保養洗衣機前，必須先拔下電源插頭。
- 安裝後必須確保能隨時透過雙極開關連接電源插座或切斷電源。
- 若洗衣機在搬運期間受損，則請勿使用。請通知售後服務中心。
- 電源電纜只能由售後服務中心更換。
- 本洗衣機僅適用於家居環境和所規定的用途。

最小機櫃規格：

| | |
|---|---|
| 寬： | 600 毫米 |
| 高： | 850 毫米 |
| 深： | 600 毫米 |

30105980ZT.fm  Page 3  Friday, December 29, 2006  7:21 PM

# 注意事項及綜合建議

## 1. 包裝

- 包裝材料可完全回收利用並標有回收符號 。處置包裝材料時，請遵循當地的現行規定。

## 2. 處置包裝材料和廢棄舊洗衣機

- 洗衣機由可回收利用的材料製成，處置時必須遵循當地的廢物處置現行規定。
- 廢棄前請先清除所有殘餘的洗衣劑並將電源線切除，使洗衣機無法再使用。
- 本洗衣機標有 WEEE，註明符合歐洲關於廢舊電器和電子設備的 2002/96/EC 規定。
  透過確保正確處置本產品，您將可以幫助防止因不適當處置本產品而對環境和人類健康所導致的潛在負面影響。

  產品或產品隨附文件上的 符號，標明不可將本洗衣機作爲家庭垃圾處理。您必須將其送到適當的電器和電子設備收集站進行回收利用。
  該產品的處置必須符合當地關於廢物處置的環境規定。
  如需關於處置、收回或回收利用本產品的詳細資訊，請聯絡您當地的城市辦事處、家用廢物服務中心或是您購買本產品的商店。

## 3. 安全指示

- 本洗衣機僅適合室內使用。
- 請勿在洗衣機附近儲存易燃液體。
- 若您要在洗衣機上面放置烘乾機，請先聯絡本公司的售後服務中心或您的專業經銷商瞭解是否可行。要在洗衣機上面放置烘乾機，只可使用本公司的售後服務中心或您的專業經銷商提供的適當堆疊工具。
- 不使用洗衣機時，請勿連接電源。
- 不使用洗衣機時，請關上水龍頭。
- 清潔或保養本機之前，請關機或拔下電源插頭。
- 請勿強行打開機門或將它當作台階使用。
- 嚴禁兒童玩弄洗衣機或爬入洗衣槽內玩耍（另請參閱下一頁的 " 兒童安全 " 章節）。
- 如有必要，電源線可使用本公司的售後服務中心所提供的同類型電源線來更換。電源線必須由持證技工進行更換。

## 4. 省電提示

- 使用本機建議的最大洗衣量，將可最有效利用能源、水供、洗衣劑和時間。
- 請勿超出製造廠商指示中標明的洗衣劑用量。
- 本機排水口配備的特殊系統 “Eco-Ball“ 可防止洗衣槽內的洗衣劑流失，從而避免洗衣劑污染環境。
- " 預洗 " 程序只用於洗滌非常髒的衣物！若要節省洗衣劑、時間、水和能源的消耗，洗滌輕微或一般骯髒程度的衣服時，不要選擇 “預洗“ 程序。
- 洗滌前，用去污劑預先處理污漬，或將乾了的污漬浸泡在水中，可減少熱洗程序的需要。
- 使用 60° C 取代 95° C 的洗衣程序或 40° C 取代 60° C 的洗衣程序將可節省能源。
- 使用滾筒烘乾機 （可調整轉速的機型）前，選擇高速脫水轉速以減少衣物的水份含量，將可節省能源和時間。

## 5. 符合 EC 聲明

- 本機符合下列歐洲標準：
  73/23/EEC 低電壓指示
  89/336/EEC 電磁相容性指示
  93/68/EC CE 標記指示



Black process 45.0° 100.0 LPI

# 洗衣機圖解

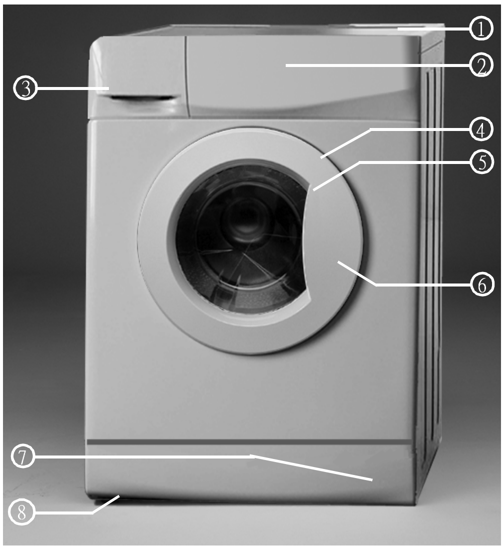


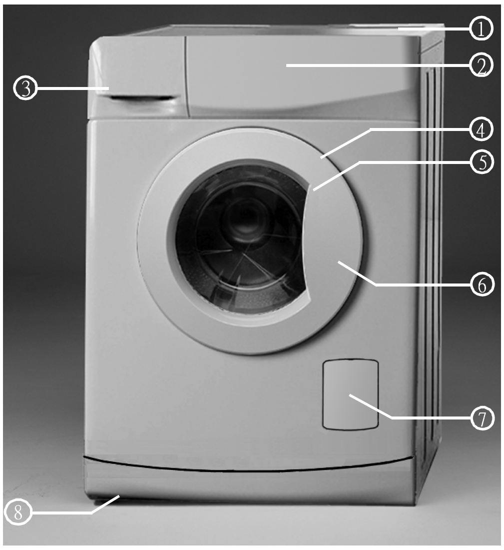


**1.** 頂板
**2.** 控制板
**3.** 洗衣劑格
**4.** 服務銘牌（在機門內）
**5.** 機門
**6.** 兒童安全裝置（若有，在機門內）
**7.** 從底座或護蓋後方存取的泵（視機型而定）
**8.** 可調機腳

# 機門

要打開機門，請握住機門把手（若您的機型配備把手），按下把手內側並拉開機門。關閉機門時輕微用力即可，門鎖卡緊時會發出聲響。

# 兒童安全

爲防止不正當使用本機，可使用一枚硬幣轉動機門內側的塑膠螺絲。

- 凹槽垂直：機門將無法鎖上。
- 凹槽水平 - 正常位置：機門可再鎖上。

# 初次洗衣前

我們建議初次洗衣時空機進行，這將可清除製造廠商測試閣下的洗衣機時所遺留的積水。

**1.** 打開水龍頭。
**2.** 關閉機門。
**3.** 將少量洗衣劑（約 30 ml）倒入洗衣劑格的主洗格 \II/。
**4.** 選擇並啓動一個短程序（請參閱個別的 " 程序圖表 "）。



Black process 45.0° 100.0 LPI

# 洗衣準備

**1.** 請依下列方式將衣物分類 ...

- 衣料類型 / 護理標籤符號
  包括棉質、混紡、免燙 / 合成纖維、羊毛及手洗衣物。
- 颜色
  請將白色衣物與颜色衣物分開，並將簇新的色衣物分開清洗。
- 放入衣物
  不同大小的衣物放在一起清洗時，可改善洗衣及脫水的效率，並可使衣物在洗衣槽內的分佈更爲均勻。
- 纖幼衣物
  在洗滌尼龍襪、腰帶等小物件或如胸罩等帶鉤衣物時，請放入洗衣袋或有拉鏈的枕頭套內清洗。清洗窗簾時，務必將掛鉤取下或以棉袋套起來清洗。

**2.** 清空所有的衣物口袋
銀幣、別針等物品會損害衣物、洗衣槽及洗衣桶。

**3.** 將衣物扣好、繫緊
在洗衣前請將衣物的拉鏈拉上、扣好鉤或扣，並將鬆開的腰帶及絲帶繫在一起。

清除污漬

- 由血漬、牛奶、雞蛋及其他有機物所留下的污漬，一般而言，可在酵素的作用下自然分解。
- 若要清除紅酒、咖啡、茶、草或水果等所留下的污漬，請在洗衣劑格的主洗格 內加入去污劑。
- 如有必要，可在洗衣前先以去污劑預先處理非常髒的部份。

染色及漂白

- 請僅使用適用於洗衣機的染色和漂白劑。
- 遵循製造廠商的指示進行。
- 本機的塑膠及橡膠部件可能會被染色劑或漂白劑染污。

放入衣物

**1.** 打開機門。

**2.** 將衣物揚鬆並逐件放入洗衣槽內，切勿過量裝入。遵循快速參考指南中提供的洗衣量。
附註： 裝入過量衣物將導致洗衣效果不理想並使衣物起皺。

**3.** 關閉機門。

# 洗衣劑和添加劑

請將洗衣劑和添加劑存放在安全、乾燥和兒童無法觸及之處。

洗衣劑的選擇將取決於：

- 衣物質料 （棉質、免燙 / 合成纖維、纖細衣物、羊毛衣物）。
  附註：清洗羊毛衣物時，必須使用專用之洗衣劑。
- 色
- 洗衣溫度
- 肮髒程度及類別

備註：

- 目前，不含磷酸鹽的洗衣劑內含非水溶性成分，可能會令深色衣物上留下白色的洗衣粉殘漬。出現上述情況時，應輕輕拍動或刷掉附於衣物上的殘漬，或改用洗衣液。
- 請僅使用專爲家用洗衣劑生產的洗衣劑和添加劑。
- 在 " 預洗 " 中使用除水垢劑、染料或漂白劑時，必須確定其適用於家用洗衣機。除水垢劑所含成分可損毀您的洗衣機。
- 切勿使用任何溶劑 （如鬆節油、汽油等）。切勿用洗衣機清洗曾經浸泡過溶劑或易燃液體的衣物。
- 在啓動 " 預洗 " （若您的機型配備此選項）時，切勿在主洗中使用洗衣液。
- 在啓動 " 延遲啓動 "（若您的洗衣機配備此功能）時，切勿使用洗衣液。

用量

請依照洗衣劑包裝上的用量建議。它取決於：

- 肮髒程度及類別
- 衣物數量
  足量：請按照洗衣劑製造廠商的建議量；
  半量：足量的四分之三；
  最少洗衣量 （約 1 公斤）：
  足量的二分之一。
- 您所處地區的水質硬度 （請參考供水公司所提供的資訊）。軟水質較硬水質的洗衣劑用（請參閱操作指示中的水質硬度表）。

注意：

過量的洗衣劑會造成泡沫過多，並且降低洗衣效率。

若洗衣機偵測到泡沫過多，將會阻止脫水。

若洗衣劑用量不足，衣物則無法洗淨，同時也會鈣化加熱系統、洗衣槽和洗衣桶。



Black process 45.0° 100.0 LPI

## 在哪裡注入洗衣劑和添加劑

洗衣劑格具備三個格 （圖 "**A**"）。

### 預洗格

- 用於預洗的洗衣劑

### 主洗格

- 用於主洗的洗衣劑
- 去污劑
- 柔順劑

### 柔順劑格

- 衣物柔順劑
- 衣漿液

注入添加劑時不可超過 "MAX" 標記。

### 使用氯漂白劑

- 在所需程序 （棉質、合成纖維）中洗滌您的衣物，在 SOFTENER 格中加入適量的氯漂白劑 （小心關上洗衣劑格）。
- 程序結束時立即啓動 “ 過水及脫水 “ 程序以消除任何殘留的漂白劑氣味；若需要，您可以添加柔順劑。
  切勿同時將氯漂白劑和柔順劑放入柔順劑格。

### 使用衣漿

- 選擇 " 過水及脫水 " 程序，檢查轉速是否調整爲不超過 800 轉 / 分。
- 啓動程序，將洗衣劑格拉出直到您可以看到約 3 公分的柔順劑格。
- 在水注入洗衣劑格時將衣漿劑倒入柔順劑格。

## 如何定位主洗格內的洗衣粉和洗衣劑的隔板

若使用洗衣粉：將隔板放在最高位置。
抬高隔板直到其頂端可以斜靠。將其吊鉤放置在後方導軌的頂部末端，然後輕輕向下按壓隔板使它固定 （圖 “**B**“ 和 "**C**"）。
若隔板安裝正確，隔板與主洗格的底部之間應該會有一個間隙（圖 "**B**" 和 "**C**"）。

若使用洗衣劑：將隔板放在最低位置。使用前方導軌將隔板緊固在隔間中。
定位隔板，使它碰觸主洗格的底部 （圖 "**D**"）。

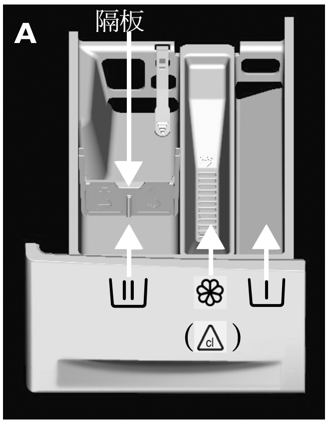


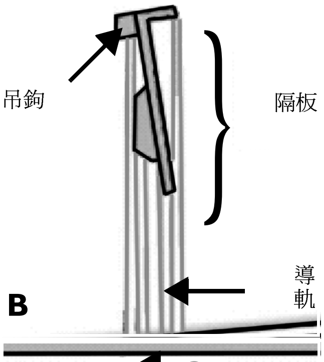


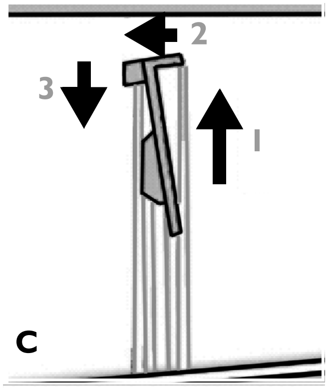


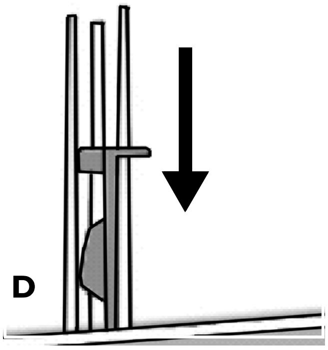

# 拆除過濾器 / 排出積水

建議您每年至少定期檢查和清潔過濾器兩至三次。

特別是發生以下情況時：

- 洗衣機無法正常排水或不能脫水。
- 若 " 清潔過濾器 " 指示燈亮起：
  重要資訊：洗衣機排水前請確保水已冷卻。

**1.** 關閉洗衣機並拔下電源插頭。

**2.** 使用洗衣劑格的隔板（圖 "**A**" / "**B**"）取下底座或撬開過濾器外蓋（視機型而定）。

**3.** 在過濾器下放一個容器。若您的洗衣機的過濾器位於底座後方（請參閱圖片 "**A**" 和 "**C**"），請使用寬和非常扁平而高度不超過 2 公分的容器。

**4.** 打開過濾器但不要將它完全拉出。慢慢地將過濾器逆時針旋轉（圖 "**C**"），直到開始排水。

**5.** 等待所有的水完全排出。

**6.** 現在將過濾器完全轉鬆並拉出。

**7.** 小心地向前傾斜洗衣機讓水流出。

**8.** 清潔過濾器和過濾器格。

**9.** 查看排水泵葉輪轉動是否順暢。

**10.** 將過濾器塞回原位，然後按順時針方向轉緊到最深位置。

**11.** 將大約一公升清水倒入洗衣劑格，重新啓動 " 省電系統 " (Eco System)。確定過濾器安裝正確並穩固到位。

**12.** 視機型而定，裝回底座或護蓋。

**13.** 將電源插頭重新插入插座。

**14.** 選擇一個程序並啓動。

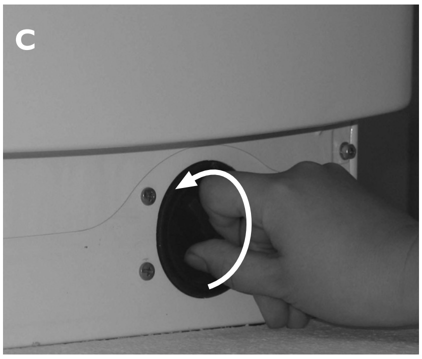

# 保養和維護

## 洗衣機外部和控制板

- 可使用柔軟濕布清洗。
- 也可使用些許中性清潔劑 （不具腐蝕性）。
- 用軟布抹乾。

## 洗衣機內部

- 每次洗衣之後，讓機門打開一段時間使洗衣機內部變乾。
- 若您從不或很少採用 95° C 洗衣，我們建議您偶爾使用 95° C 程序空機和加入少量洗衣劑清洗，以保持洗衣機內部清潔。

## 門膠圈

- 必要時以濕布清潔。
- 定期檢查門膠圈的狀況。

## 過濾器

- 每年至少定期檢查和清潔過濾器兩至三次（請參閱 " 拆除過濾器 / 排出積水 "）。

## 進水軟管

¥ 定期檢查軟管是否脆弱和出現裂縫。
- 定期檢查和清潔進水軟管內的濾網（請參閱 " 清潔進水軟管內的濾網 "）。

請勿使用易燃液體來清潔洗衣機。

## 洗衣劑格

每年至少定期清潔洗衣劑格和洗衣劑隔間三或四次，以防止洗衣劑積聚。

**1.** 按下主洗格中的釋放桿，將洗衣劑格從洗衣劑隔間取出。

**2.** 拆下柔順劑格的蓋柵。 將主洗格內的隔板向上拉將其取出（請查看黑色箭頭）。

**3.** 在水龍頭下沖洗所有的部件。

**4.** 用濕布清潔洗衣劑隔間。

**5.** 重新將隔板和蓋柵裝回洗衣劑格並將洗衣劑格推入洗衣劑隔間。

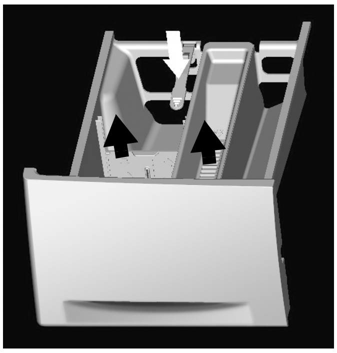

## 進水軟管

若進水軟管出現損毀迹象，請用本公司的售後服務中心或您的專業經銷商提供的相同類型新軟管進行更換。
若您的進水軟管具有透明的軟管塗層（圖 "**C**"），請定期檢查透明塗層的顔色。若塗層開始變成紅色，即表示軟管可能有漏洞並且應該更換。請聯絡本公司的售後服務中心或專業經銷商獲取替換軟管。

## 清潔進水軟管內的濾網

**1.** 關掉水龍頭並從水龍頭上鬆開進水軟管。
**2.** 清潔管內的濾網並將進水軟管擰回水龍頭。
**3.** 拆下洗衣機後方的進水軟管。
**4.** 用鉗子將濾網從洗衣機連接上拆下並加以清潔。
**5.** 裝回濾網並將進水軟管擰回機上。
**6.** 打開水龍頭並確認各連接位均完全不漏水。

**A**

**B**

**C**

Black process 45.0° 100.0 LPI

30105980ZT.fm Page 10 Friday, December 29, 2006 7:21 PM

# 故障排除指南

您的您的洗衣機配備各種自動安全功能。這將能更快地偵測故障並適時啓動安全系統。這些常有的小問題可在數分鐘內獲得解決。

| 問題 | 原因、解決方法、提示 |
|---|---|
| 洗衣機無法開動，指示燈沒有亮起。 | • 插頭未正確插入插座。<br>• 電源插座或保險絲未正常操作 （可使用檯燈或類似器具測試）。<br>• 未按下 " 開關 " 按鈕 （若您的機型配備此按鈕）。 |
| 雖然已按下 " 開始 / 暫停 "，但洗衣機無法開動。 | • 機門未正確關閉 （另請參閱 " 兒童安全 "）。<br>• 已啓用 " 鎖定按鈕 " 功能 （若您的機型配備此功能）。要解除鎖定按鈕，可同時按下溫度和轉速按鈕，然後按住這兩個按鈕至少 3 秒。螢幕上的鑰匙符號將會消失，程序即可啓動。 |
| 洗衣機在程序運行期間停止，而且 " 啓動 / 暫停 " 指示燈閃爍 | • 已啓用 " 延遲脫水 " 選項（若您的機型配備此選項）並且 （防皺）在程序順序指示燈中亮起 - 按下 " 啓動 / 暫停 " 或選擇並啓動 " 排水 " 程序以終止 " 延遲脫水 "。<br>• 程序已更改 - 重新選擇所需程序並按下 " 啓動 / 暫停 "。<br>• 程序被中斷且最終打開機門 - 關閉機門並按下 " 啓動 / 暫停 " 重新啓動程序。<br>• 已啓用洗衣機的安全系統 （請參閱 " 紅色指示燈說明 "）。<br>• 水龍頭未打開或進水軟管扭結 （" 水龍頭關閉 " 指示燈亮起）。 |
| 洗衣劑和 / 或添加劑殘留在洗衣劑格內 | • 主洗格內的隔板未正確安裝或不適合使用洗衣粉或洗衣劑 （請參閱 " 洗衣劑和添加劑 "）。<br>• 進水不足；供水軟管內的濾網可能阻塞（請參閱 " 保養和維護 "）。 |
| 脫水時機身震動 | • 搬運螺栓尚未拆除；使用洗衣機前，請務必拆除搬運螺栓。<br>• 洗衣機不水平 / 未穩固固定在四個機腳上（請參閱個別的《安裝指南》）。 |
| 最終脫水效果不理想 | 洗衣機配備衣物失衡偵測及校正系統。若個別放入厚大衣物 （如浴衣），此系統可能會自動降低脫水轉速或甚至會完全中斷脫水以保護洗衣機。<br>• 厚大衣物會阻止脫水；添加較小件的衣物並重複脫水程序。<br>• 過量的泡沫會阻止脫水；選擇並啓動 " 過水及脫水 " 程序。避免使用過量洗衣劑 （請參閱 " 洗衣劑和添加劑 "）。<br>• " 變動脫水 " 按鈕（若您的機型配備此按鈕）已設爲低轉速，或已啓用 " 不脫水 " 選項 （若您的機型配備此選項）。 |
| 最初顯示的程序時間被延長 / 縮短一段時間 （僅適用於配備顯示幕以標示剩餘程序時間的洗衣機） | 這是洗衣機適應洗衣程序時間可能會受影響的因素的正常能力，例如：泡沫過多、由於衣物過重而失衡、由於降低供水溫度而導致加熱時間延長。<br>由於這些原因的影響，程序時間將會重新計算並在必要時更新。在某些螢幕上（視機型而定），這類更新期間將會出現動畫。 |



Black process 45.0° 100.0 LPI

30105980ZT.fm  Page 11  Friday, December 29, 2006  7:21 PM

紅色指示燈說明

| 紅色指示燈<br>亮起<br>（若您的洗衣機配備該指示燈） | 螢幕上的<br>紅色指示燈<br>（若您的洗衣機配備該螢幕） | 說明<br>原因<br>解決方法 |
|---|---|---|
| " 水龍頭關閉 " | - - - | 洗衣機沒有水供或水供不足。" **啟動 / 暫停** " 指示燈閃爍。<br>請檢查：<br>• 水龍頭是否完全打開，水壓是否足夠。<br>• 進水軟管是否扭結。<br>• 進水軟管內的濾網是否阻塞（請參閱 " 保養和維護 "）。<br>• 進水軟管是否結冰。<br>• 進水軟管的安全閥觀測窗是否爲紅色的（您的洗衣機必須配備如圖片 **"B"** 中顯示的進水軟管）- 請參閱上一個章節 " 保養和維護 "）；使用本公司的售後服務中心或您的專業經銷商提供的新軟管進行更換。<br>問題解決之後，按下 " **啟動 / 暫停** " 重新啟動程序。若故障再次出現，請聯絡本公司的售後服務中心（請參閱下一章節）。 |
| " 清潔泵 " | - - - | 廢水未泵出。洗衣機在相應的步驟中停止；拔下電源插頭並檢查：<br>• 排水管是否扭結。<br>• 過濾器或泵是否阻塞（請參閱 " 拆除過濾器 / 排出積水 " 章節，確定洗衣機排水前水已冷卻）。<br>• 排水管是否結冰。<br>問題解決之後，選擇並啟動 " 排水 " 程序，或按下 " 重設 " 按鈕至少 **3** 秒；然後重新啟動所需程序。若故障再次出現，請聯絡本公司的售後服務中心（請參閱下一章節）。 |



Black process 45.0° 100.0 LPI

30105980ZT.fm  Page 12  Friday, December 29, 2006  7:21 PM

<table>
<tr><th>紅色指示燈<br>亮起<br>（若您的洗衣機配備該<br>指示燈）</th><th>時間顯示的<br>標示<br>（若您的洗衣機配備<br>該顯示）</th><th>說明<br>原因<br>解決方法</th></tr>
<tr><td rowspan="5">" 服務 "</td><td>從 "F02" 至 "F35"<br>（除了 "F09"）</td><td>" 電氣模組故障 "<br>選擇並啓動 " 排水 " 程序，或按下 " 重設 " 按鈕至少 3 秒。</td></tr>
<tr><td>"F09"</td><td>" 水位過高 " （取消程序或錯誤操作之後）。關閉洗衣機電源 （透過按下 " 開關 " 按鈕或透將程序選擇器轉到 " 關閉 " 位置 - 視機型而定），然後重新開機，選擇 " 排水 " 程序並在 15 秒之內啓動。</td></tr>
<tr><td>"FA"</td><td>" 止水故障 "<br>關閉洗衣機電源 （透過按下 " 開關 " 按鈕或透過將程序選擇器轉到 " 關閉 " 位置 - 視機型而定），拔下電源插頭並關閉水龍頭。小心地向前傾斜洗衣機讓積聚的水從底部流出。然後：<br>• 將電源插頭重新插入插座。<br>• 打開水龍頭（若水在沒有啓動洗衣機的情況下立即流入則表示有故障；關閉水龍頭然後通知售後服務中心）。<br>• 再次選擇並啓動所需程序。</td></tr>
<tr><td>"Fod"</td><td>" 太多泡沫 "<br>泡沫太多會中斷洗衣程序。<br>• 選擇並啓動 " 過水及脫水 " 程序。<br>• 然後使用較少洗衣劑，再次選擇並啓動所需程序。</td></tr>
<tr><td></td><td>若上述任何故障仍然存在，請拔下洗衣機的電源插頭、關閉水龍頭，然後聯絡本公司的售後服務中心（請參閱下一章節）。</td></tr>
</table>



Black process 45.0°  100.0 LPI

# 售後服務

聯絡售後服務中心前，請：

**1.** 儘量自行解決問題 （請參閱 " 故障排除指南 "）。
**2.** 重新啓動程序，看看問題是否已經解決。
**3.** 若洗衣機繼續運轉不正常，請致電本公司的售後服務中心。

請說明：

- 問題的本質。
- 洗衣機機型。
- 維修編號（在 SERVICE 之後的編號）。

SERVICE 0000 000 00000

售後服務標籤位於機門內側。

- 您的詳細地址。
- 您的電話號碼和區域碼。
  售後服務中心的電話號碼和地址可在保證卡上找到，或可向您購買洗衣機的經銷商洽詢。

# 配件

對於某些機型，您可以透過本公司的售後服務中心或您的專業經銷商獲得：

- 一個可安裝在您的洗衣機下方的底座 ，用於墊高洗衣機，讓您在取放衣物時更舒適而不無需再彎腰來操作本裝置。此外，它還可以有效利用空間。
- 一套堆疊工具您可以利用它來將烘乾機疊放在洗衣機上面，從而有效節省空間。

某些機型可以安裝在廚房工作台下；在此情況下，請聯絡本公司的售後服務中心 （請參閱上文）。請注意：

- 本機必須安裝在連續的工作台面之下。
- 根據安全法律規定，本機的安裝必須由授權技術人員或本公司的售後服務中心派員安裝。
- 本機的安裝必須使用 UBS 底座套件的間隔蓋板，蓋板可從專業經銷商或本公司的售後服務中心購買。

# 搬運 / 處理

搬運時，切勿提拉洗衣機的頂板。

**1.** 拔下電源插頭。
**2.** 關閉水龍頭。
**3.** 檢查並確定機門和洗衣劑格都已正確關閉。
**4.** 拆除進水和排水軟管。
**5.** 排出洗衣機和軟管內的所有積水 （請參閱 " 拆除過濾器 / 排出積水 "）。
**6.** 安裝搬運螺栓 （規定）。



Black process 45.0°  100.0 LPI

# CONTENTS


BEFORE USING THE WASHING MACHINE

PRECAUTIONS AND GENERAL RECOMMENDATIONS

DESCRIPTION OF THE WASHING MACHINE

DOOR

CHILD SAFETY

BEFORE THE FIRST WASH CYCLE

PREPARATION OF THE WASHING

DETERGENTS AND ADDITIVES

REMOVING THE FILTER/DRAINING RESIDUAL WATER

CARE AND MAINTENANCE

TROUBLESHOOTING GUIDE

AFTER-SALES SERVICE

ACCESSORIES

TRANSPORT/HANDLING

ELECTRICAL CONNECTION

# BEFORE USING THE WASHING MACHINE

### 1. Removing the packaging and inspection

- After unpacking, make sure that the washing machine is undamaged. If in doubt, do not use the washing machine. Contact After-Sales Service or your local retailer.
- Check that the accessories and supplied parts are all present.
- Keep the packaging materials (plastic bags, polystyrene parts, etc.) out of reach of children, as they are potentially dangerous.
- If the appliance was exposed to the cold prior to delivery, keep it at room temperature for a few hours before operating.

### 2. Remove the transport bolts

- The washing machine is fitted with transport bolts to avoid any possible damage to the interior during transport. Before using the machine, it is imperative that the transport bolts are removed.
- After their removal, cover the openings with the 4 enclosed plastic caps.

### 3. Install the washing machine

- Remove the protective film from the control panel (if available on your model).
- Move the appliance without lifting it by the worktop.
- Install the appliance on a solid and level floor surface, preferably in a corner of the room.
- Make sure that all four feet are stable and resting on the floor and then check that the washing machine is perfectly level (use a spirit level).
- In case of wooden or so-called “floating floors” (for instance certain parquet or laminate floors), place the appliance on a 60 x 60 cm sheet of plywood at least 3 cm in thickness which is secured to the floor.

### 4. Water inlet

- Connect the water supply inlet hose in accordance with the regulations of your local water company.
- Water inlet: Cold water only (if no other information on your programme chart)
- Water tap: 3/4” threaded hose connector
- Water pressure (flow pressure): 100-1000 kPa (1-10 bar).
- Use only new hoses to connect the washing machine to the water supply. Used hoses must not be used and should be discarded.

### 5. Drain

- Connect the drain hose to the siphon or hook it over the edge of a sink by means of the “U” bend supplied.
- If the washing machine is connected to an integrated drainage system, ensure the latter is equipped with a vent to avoid simultaneous loading and draining of water (siphoning effect).

### 6. Electrical connection

- Electrical connections must be carried out by a qualified technician in compliance with the manufacturer’s instructions and current standard safety regulations.
- Data regarding voltage, power consumption and protection requirements is given on the inside of the door.
- The appliance must be connected to the mains by means of a socket with an earth connection in accordance with current regulations. The washing machine must be earthed by law. The manufacturer declines all liability for damage to property or injury to persons or animals, deriving directly or indirectly from failure to observe the directions.
- Do not use extension leads or multiple sockets.
- Before any maintenance on the washing machine disconnect it from the mains supply.
- After installation, access to the mains plug or to disconnection from mains supply must be ensured at all times via a double-pole switch.
- Do not operate the washing machine if it has been damaged during transport. Inform the After-Sales Service.
- Mains cable replacement is only to be carried out by After-Sales Service.
- The appliance must only be used in the household for the prescribed uses.

**Minimum housing dimensions:**

| | |
|---|---|
| Width: | 600 mm |
| Height: | 850 mm |
| Depth: | 600 mm |

# PRECAUTIONS AND GENERAL RECOMMENDATIONS

## 1. Packaging

- The packaging material is entirely recyclable, and marked with the recycling symbol . Adhere to current local regulations when disposing of packaging material.

## 2. Disposing of packaging and scrapping old washing machines

- The washing machine is built from reusable materials. It must be disposed of in compliance with current local waste disposal regulations.
- Before scrapping, remove all detergent residues and cut off the power cable so that the washing machine is made unusable.
- This appliance is marked according to the European directive 2002/96/EC on Waste Electrical and Electronic Equipment (WEEE).
  By ensuring this product is disposed of correctly, you will help prevent potential negative consequences for the environment and human health, which could otherwise be caused by inappropriate waste handling of this product.

  The symbol on the product, or on the documents accompanying the product, indicates that this appliance may not be treated as household waste. Instead it shall be handed over to the applicable collection point for the recycling of electrical and electronic equipment.
  Disposal must be carried out in accordance with local environmental regulations for waste disposal.
  For more detailed information about treatment, recovery and recycling of this product, please contact your local city office, your household waste disposal service or the shop where you purchased the product.

## 3. Safety instructions

- The washing machine is appropriate for indoor use only.
- Do not store flammable fluids near the appliance.
- If you want to place a dryer on top of your washing machine, first contact our After-Sales Service or your specialist dealer to verify if this is possible. Placing a dryer on your washing machine is only admitted by using an appropriate stacking kit available through our After-Sales Service or your specialist dealer.
- Do not leave the appliance plugged in when not in use.
- Turn off the tap when not in use.
- Before any cleaning and maintenance switch off the machine or disconnect it from the mains.
- Never open the door forcibly or use it as a step.
- Children must not be allowed to play with the washing machine or to climb into the drum (see also the following page chapter “Child Safety”).
- If necessary, the power cable may be replaced with an identical one obtained from our After-Sales Service. The power cable must only be replaced by a qualified technician.

## 4. Energy saving tips

- Achieve the best use of energy, water, detergent and time by using the recommended maximum load size.
- Do not exceed the detergent dosages indicated in the manufacturer’s instructions.
- The Eco-Ball - a special system in the outlet - will prevent detergent loss from the drum to avoid detergent loss into the environment.
- Use “Prewash” for heavily soiled laundry only! Save detergent, time, water and energy consumption by not selecting “Prewash” for slight to normally soiled laundry.
- Pretreat stains with stain remover or soak dried-in stains in water before washing to reduce the necessity of a hot wash programme.
- Save energy by using a 60° C instead of a 95° C wash programme or a 40° C instead of a 60° C wash programme.
- Save energy and time by selecting a high spin speed to reduce the water content in laundry before using a tumble dryer (for machines with adjustable spin speed).

## 5. EC Declaration of Conformity

- The appliance conforms to the following European Standards:
  73/23/EEC Low voltage directive
  89/336/EEC Electromagnetic Compatibility Directive
  93/68/EC CE Marking Directive CE.

# DESCRIPTION OF THE WASHING MACHINE

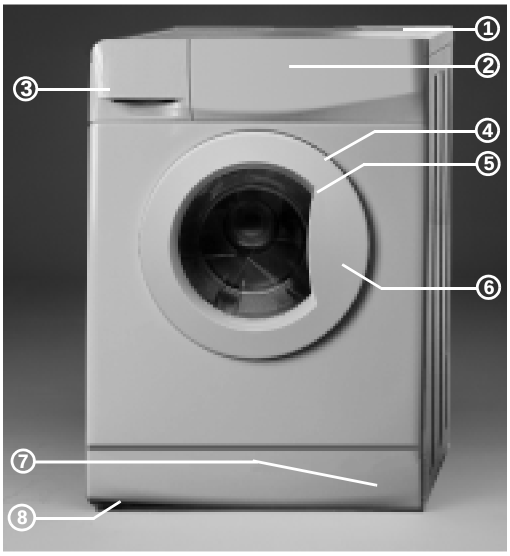


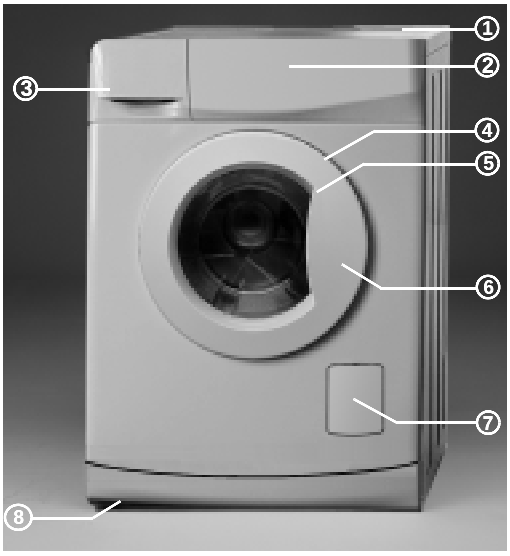


1. Worktop
2. Control panel
3. Detergent dispenser
4. Service plate (inside the door)
5. Door
6. Child safety device (if provided, inside the door)
7. Pump access behind plinth or cover (depending on the model)
8. Adjustable feet

# DOOR

To open the door, hold the door handle, press the inside handle (if available on your model) and pull the door. Close the door by pressing it without excessive force until it clicks shut.

# CHILD SAFETY

To protect the appliance against improper use, turn the plastic screw on the interior of the door by using a coin.

- Slot vertical: the door will not lock.
- Slot horizontal - normal position: the door can be locked again.

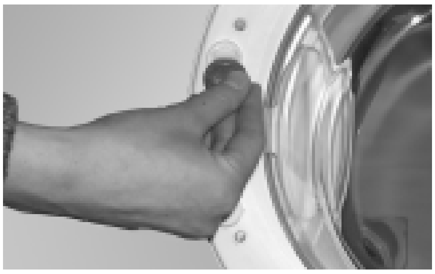

# BEFORE THE FIRST WASH CYCLE

To remove any residual water used in testing by the manufacturer, we recommend that you carry out a short wash cycle without laundry.

1. Open the tap.
2. Close the door.
3. Pour a little detergent (about 30 ml) into the main wash chamber II of the detergent dispenser.
4. Select and start a short programme (see separate “Programme Chart”).

# PREPARATION OF THE WASHING

### 1. Sort the laundry according to...

- **Type of fabric / care label symbol**
  Cottons, mixed fibres, easy care/synthetics, wool, handwash items.
- **Colour**
  Separate coloured and white items. Wash new coloured articles separately.
- **Loading**
  Wash items of different sizes in the same load to improve washing efficiency and distribution in the drum.
- **Delicates**
  Wash small items (e.g. nylon stockings, belts etc.) and items with hooks (e.g. bras) in a cloth bag or pillow case with zip. Always remove curtain rings or wash curtains with the rings inside a cotton bag.

### 2. Empty all pockets

Coins, safety pins etc. can damage your laundry as well as the appliance drum and tub.

### 3. Fasteners

Close zips and fasten buttons or hooks; loose belts or ribbons should be tied together.

### Stain removal

- Blood, milk, eggs etc. are generally removed by the automatic enzyme phase of the programme.
- To remove red wine, coffee, tea, grass and fruit stains etc. add a stain remover to the main wash chamber II of the detergent dispenser.
- Pre-treat heavily-soiled areas with stain remover if necessary.

### Dyeing and bleaching

- Only use dyes and bleaches that are suitable for washing machines.
- Follow the Manufacturer's instructions.
- Plastic and rubber parts of the washing machine can be stained by dyes or bleaches.

### Loading the laundry

**1.** Open the door.
**2.** Load the articles one at a time loosely into the drum, without overfilling. Observe the load sizes given in the quick reference guide.
**Note:** overloading the machine will result in unsatisfactory washing results and creased laundry.
**3.** Close the door.

# DETERGENTS AND ADDITIVES

**Keep detergents and additives in a safe, dry place out of the reach of children!**

### The choice of detergent depends on:

- Type of fabric (cottons, easy care/synthetics, delicate items, wool).
  **Note:** Use only specific detergents for washing wool.
- Colour.
- The wash temperature.
- Degree and type of soiling.

**Remarks:**

- Any whitish residues on dark fabrics are caused by insoluble compounds used in modern phosphate-free powder detergents. If this occurs, shake or brush out the fabric or use liquid detergents.
- Use only detergents and additives specifically produced for domestic washing machines.
- When using descaling agents, dyes or bleaches for the pre-wash, make sure that they are suitable for use in domestic washing machines. Descalers could contain products which could damage your washing machine.
- Do not use any solvents (e.g. turpentine, benzine). Do not machine wash fabrics that have been treated with solvents or flammable liquids.
- Do not use liquid detergent for the main wash when having activated the "prewash" option (if available on your model).
- Do not use liquid detergent when activating the "Start Delay" function (if available on your washing machine).

### Dosage

Follow the dosage recommendations on the detergent pack. They depend on:

- degree and type of soiling
- size of wash
  full load: follow the detergent manufacturer's instructions;
  half load: 3/4 the amount used for a full load;
  Minimum load (about 1 kg):
  1/2 the amount used for a full load
- water hardness in your area (ask for information from your water company). Soft water requires less detergent than hard water (refer to the water hardness table in the operating instructions).

**Notes:**

Too much detergent can result in excess foam formation, which reduces washing efficiency.
If the washing machine detects too much foam, it may prevent spinning.
Insufficient detergent may result in grey laundry in time and also calcifies the heating system, drum and hoses.

## Where to put detergent and additives

The detergent drawer has three chambers (fig. “**A**”).

**Prewash Chamber**

- Detergent for the prewash

**Main Wash Chamber**

- Detergent for the main wash
- Stain remover
- Water softener

**Softener Chamber**

- Fabric softener
- Liquid starch

Pour additives only up to the “MAX” mark.

**Using chlorine bleach**

- Wash your laundry in the desired programme (Cotton, Synthetics), adding an appropriate amount of chlorine bleach to the SOFTENER chamber (close the detergent dispenser carefully).
- Immediately after end of programme, start the “Rinse and Spin” programme to eliminate any residual bleach smell; if you want, you can add softener.
  Never put both chlorine bleach and softener into the softener chamber at the same time.

## Using starch

- Select the “Rinse and Spin” programme and check that the spin speed is adjusted to not more than 800 rpm.
- Start the programme, pull out the detergent dispenser so that you can see approximately 3 cm of the softener chamber.
- Pour the starch solution prepared into the softener chamber while the water is running into the detergent dispenser.

## How to position the separator in the main wash chamber for powder or liquid detergent

For use with powder detergent: place the separator in the higher position.
Lift the separator until its top can be reclined. Place its hooks on the upper end of the back guide rails and slightly push the separator down to fix it (fig. “**B**” and “**C**”).
A gap should remain between the separator and the bottom of the main wash chamber, if the separator has been correctly installed (fig. “**B**” and “**C**”).

For use with liquid detergent: place the separator in the lower position.
Secure the separator in the chamber using the front guide rails.
Position the separator so that it touches the bottom of the main wash chamber (fig. “**D**”).

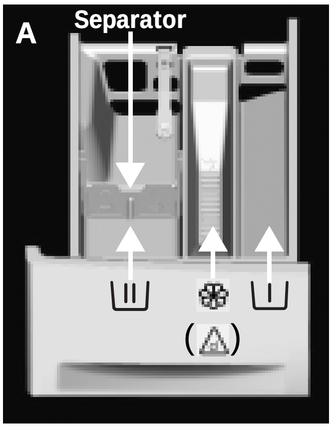


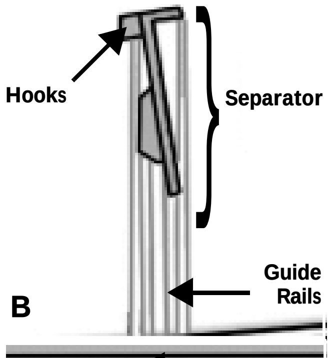


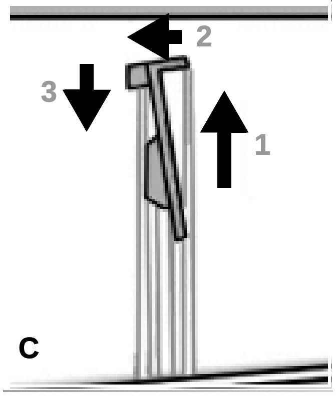


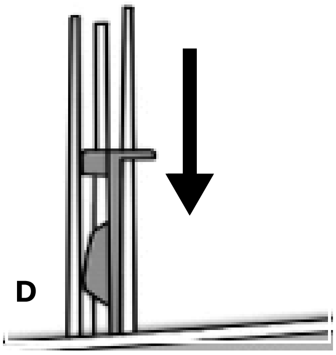

# REMOVING THE FILTER/DRAINING RESIDUAL WATER

We recommend that you check and clean the filter regularly, at least two or three times a year.

**Especially:**

- If the appliance is not draining properly or if it fails to perform spin cycles.
- If the “Clean filter” indication lights up:
  **IMPORTANT: make sure the water has cooled before draining the appliance.**

1. Stop the appliance and unplug it.
2. Remove the plinth or open the cover (depending on the model) by using the separator of the detergent dispenser (fig. **A** / **B**).
3. Place a container beneath it. If your washing machine has the filter situated behind the plinth (see pictures “**A**” and “**C**”), use a broad and very flat container with a maximum height of 2 cm.
4. Open the filter but do not remove it completely. Slowly turn the filter counterclockwise (fig. **C**) until the water begins to drain out.
5. Wait until all the water has drained.
6. Now unscrew the filter completely and remove it.
7. Tilt the appliance forwards carefully to allow the water to flow out.
8. Clean the filter and the filter chamber.
9. Check that the pump rotor moves freely.
10. Re-insert the filter and screw it in clockwise as far as it will go.
11. Pour about 1 litre of water into the detergent drawer to reactivate the “Eco system”. Check that the filter is inserted properly and securely.
12. Reinstall the plinth or the cover, depending on the model.
13. Plug in the appliance again.
14. Select a programme and start it.

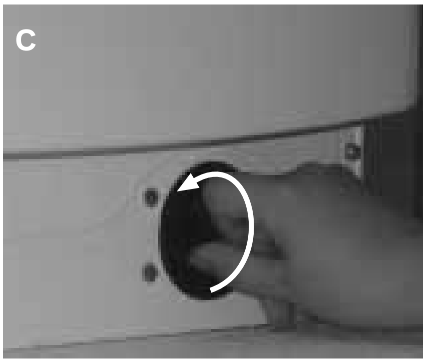

# CARE AND MAINTENANCE

### Appliance exterior and control panel
- Can be washed down with a soft, damp cloth.
- A little neutral detergent (non abrasive) can also be used.
- Dry with a soft cloth.

### Appliance interior
- After each washing, leave the door open for some time to allow the inside of the appliance to dry.
- If you never or seldom wash your laundry at 95°C, we recommend to occasionally run a 95°C programme without laundry, adding a small amount of detergent, to keep the interior of the appliance clean.

### Door seal
- Clean with a damp cloth when necessary.
- Check the condition of the door seal periodically.

### Filter
- Check and clean the filter regularly, at least two or three times a year (see “Removing The Filter/ Draining Residual Water”).

### Water supply hose(s)
- Check the hose(s) regularly for brittleness and cracks.
- Regularly check and clean the mesh filter inside the inlet hose (see “Cleaning the mesh filter in the water supply hose(s)”).

**Do not use flammable fluids for cleaning the appliance.**

### Detergent dispenser

**Clean the dispenser drawer and the dispenser compartment regularly, at least three or four times a year, to prevent detergent build-up:**

1. Press the release lever in the main wash chamber downward and remove the dispenser drawer from the dispenser compartment.
2. Remove the cover grid from the softener chamber. Remove the separator from the main wash chamber by pulling it upward (see dark arrows).
3. Wash all the parts under running water.
4. Clean the dispenser compartment with a damp cloth.
5. Refit the separator and the cover grid in the dispenser drawer and push the drawer back into the dispenser compartment.

## Water supply hose(s)

If a supply hose shows a damage, replace it by a new hose of the same type, available through our After-Sales Service or your specialist dealer.
If your supply hose has a transparent hose coating (fig. "**C**"), periodically check the colour of the transparent coating. If the coating begins to turn red, this is an indication that the hose may have a leak and should be replaced. Contact our After-Sales Service team or specialist dealer to obtain a replacement hose.

## Cleaning the mesh filter in the water supply hose(s)

1. Close the tap and loosen the inlet hose on the tap.
2. Clean the internal mesh filter and screw the water inlet hose back onto the tap.
3. Now unscrew the inlet hose on the rear of the washing machine.
4. Pull off the mesh filter from the washing machine connection with universal pliers and clean it.
5. Refit the mesh filter and screw the inlet hose on again.
6. Turn on the tap and ensure that the connections are completely water-tight.

# TROUBLESHOOTING GUIDE

Your washing machine is equipped with various automatic safety functions. These enable faults to be detected in good time and the safety system can react appropriately. These faults are frequently so minor that they can be removed within a few minutes.

| Problem | Causes, Solutions, Tips |
|---|---|
| **Appliance does not start, no indicator lamps are on** | • Plug is not properly inserted in socket.<br>• Socket or fuse does not function correctly (use a table lamp or similar appliance to test it).<br>• the "On/Off" button has not been pressed (if available on your model). |
| **Appliance does not start although "Start/Pause" has been pressed** | • Door is not properly closed (see also "Child Safety").<br>• The "Lock buttons" feature has been activated (if available on your model). To unlock the buttons, push the temperature and the spin speed button simultaneously and hold them at least for 3 seconds. The key symbol on the display disappears and the programme can be started. |
| **Appliance stops during the programme, and the "Start/Pause" light flashes** | • "Rinse hold" option is activated (if available on your model) and (Anticrease) lights up in the programme sequence indicator - terminate "Rinse hold" by pressing **"Start/Pause"** or by choosing and starting "Drain" programme.<br>• Programme has been changed - reselect desired programme and press **"Start/Pause"**.<br>• Programme has been interrupted and eventually door has been opened - close door and restart programme by pressing **"Start/Pause"**.<br>• The appliance's safety system has been activated (see "Description of red indications").<br>• Water tap is not opened or water inlet hose is kinked ("Water tap closed" indication lights up). |
| **Detergent dispenser contains residues from detergent and/or additives** | • Separator in main wash chamber is not correctly installed or not adapted to use of powder and liquid detergent (see "Detergents And Additives").<br>• Water entering is not enough; the mesh filters of the water supply could be blocked (see "Care And Maintenance"). |
| **Appliance vibrates during spin cycle** | • Transport bolts have not been removed; **before using the machine, it is imperative that the transport bolts are removed.**<br>• Appliance is not level / not standing firmly on all four feet (see separate "Installation Guide"). |
| **Final spin results are poor** | The appliance has an imbalance detection and correction system. If individual heavy items are loaded (e.g. bathrobes), this system may reduce the spin speed automatically or even interrupt the spin completely in order to protect the washing machine.<br>• Heavy item(s) prevented spinning; add smaller articles of laundry and repeat spin cycle.<br>• Excessive foam formation prevented spinning; select and start "Rinse & Spin" programme. Avoid excessive detergent dosing (see "Detergents And Additives").<br>• "Variable spin" button (if available on your model) has been set to a low spin speed, or "No spin" option (if available on your model) has been activated. |
| **Programme time initially displayed is lengthened / shortened by a period of time (only for appliances having a display which indicates the remaining programme time)** | Normal capacity of the appliance to adapt to factors that can have an effect on the wash programme time, e.g.: Excess of foam formation, load imbalance due to heavy items of laundry, prolonged heating time resulting from reduced inlet water temperature.<br>Due to such influences, the programme time is recalculated and updated if necessary. **On certain displays (depending on the model), an animation appears during such update periods.** |

## Description of red indications

| Red indication lights up (if fitted on your machine) | Red indication on display (if fitted on your machine) | Description Causes Solutions |
|---|---|---|
| "Water tap closed" | --- | Appliance has no or insufficient water supply. The **"Start/Pause"** light flashes.<br>Check whether:<br>• Water tap is fully open and water supply pressure is sufficient.<br>• Kinks are present in the water inlet hose.<br>• Mesh filter of water supply hose is blocked (see "Care And Maintenance".<br>• The water hose is frozen up.<br>• The safety valve inspection window of your water supply hose is red (provided your appliance has a water supply hose as shown on picture **"B"** - see previous chapter "Care And Maintenance"); replace the hose by a new one available through our After-Sales Service or your specialist dealer.<br>After problem has been removed, restart programme by pressing **"Start/Pause"**. If the fault occurs again, contact our After-Sales Service (see next chapter). |
| "Clean pump" | --- | Waste water is not pumped out. The appliance stops in the corresponding programme step; unplug it and check whether:<br>• Kinks are present in the drain hose.<br>• Filter or pump is blocked (see chapter "Removing The Filter/Draining Residual Water"; **make sure the water has cooled before draining the appliance).**<br>• The drain hose is frozen up.<br>After problem has been removed, select and start the "Drain" programme or push the "Reset" button for at least 3 seconds; afterwards restart the desired programme. If the fault occurs again, contact our After-Sales-Service (see next chapter). |

<table>
<tr><th>Red indication lights up<br>(if fitted on your machine)</th><th>Indication on time display<br>(if fitted on your machine)</th><th>Description<br>Causes<br>Solutions</th></tr>
<tr><td rowspan="4">“Service”</td><td>from “F02” to “F35”<br>(except “F09”)</td><td>“Electrical module fault”<br>Select and start the “Drain” programme or push the “Reset” button for at least 3 seconds.</td></tr>
<tr><td>“F09”</td><td>“Water level too high” (after programme cancellation or false operating). Switch off the appliance (by pressing the “On/Off” button or by turning the programme selector to the “Off/O” position - depending on the model) and then switch it on again, select the programme “Drain” and start within 15 sec.</td></tr>
<tr><td>“FA”</td><td>“Waterstop fault”<br>Switch off the appliance (by pressing the “On/Off” button or by turning the programme selector to the “Off/O” position - depending on the model), pull out mains plug and turn the water tap off. Tilt the appliance forward carefully to allow collected water to flow out from the bottom. Then:<br>• Plug in the appliance again.<br>• Turn the water tap on (if water immediately flows into the appliance without the appliance being started, there is a failure; turn off the tap and notify the After-Sales Service).<br>• Select and start the desired programme again.</td></tr>
<tr><td>“Fod”</td><td>“Overfoaming”<br>Too much foam interrupted the wash programme.<br>• Select and start the “Rinse & Spin” programme.<br>• Afterwards select and start the desired programme again, using less detergent.<br><br>If any of the faults described above persist, unplug the appliance, turn off the water tap and contact our After-Sales Service (see next chapter).</td></tr>
</table>

# AFTER-SALES SERVICE

**Before contacting After-Sales Service:**

**1.** Try to remedy the problem yourself (see “Troubleshooting Guide”).

**2.** Restart the programme to check whether the problem has solved itself.

**3.** If the washing machine continues to function incorrectly, call our After-Sales Service.

**Specify:**
- The nature of the problem.
- The washing machine model.
- The service code (number after the word SERVICE).

SERVICE 0000 000 00000

**The After-Sales Service sticker can be found inside the door.**
- Your full address.
- Your telephone number and area code.
  After-Sales Service phone numbers and addresses are given on the guarantee card. Alternatively, consult the dealer where you purchased the appliance.

# ACCESSORIES

For some models, you can obtain via our After-Sales Service or your specialist dealer:
- a **Pedestal Drawer** which can be installed beneath your washing machine. It raises your machine to allow for more comfortable loading and unloading, as you now no longer need to bend as far to access the unit. Furthermore, it offers a great space-management tool and storage solution.
- a **Stacking Kit** by means of which you can fix your dryer on top of your washing machine and thus effectively save space.

Certain models are able to be installed under your kitchen worktop; in that case, please contact our After-Sales Service (see above). Be aware that:
- the appliance MUST be installed under a continuous worktop.
- according to the legal safety regulations, the installation of the appliance MUST be carried out by an authorized technician or by our After-Sales Service.
- the appliance MUST be installed using the intermediate cover panel of the **UBS Base Set** which can be obtained from specialist dealers or our After-Sales Service.

# TRANSPORT/HANDLING

**Never lift the appliance by the worktop when transporting.**

**1.** Pull out the mains plug.

**2.** Turn off the tap.

**3.** Check that machine door and detergent dispenser are properly closed.

**4.** Disconnect the inlet and drain hoses.

**5.** Eliminate all water from the hoses and from the appliance (see “Removing The Filter/Draining Residual Water”).

**6.** Fit the transport bolts (obligatory).

# ELECTRICAL CONNECTION

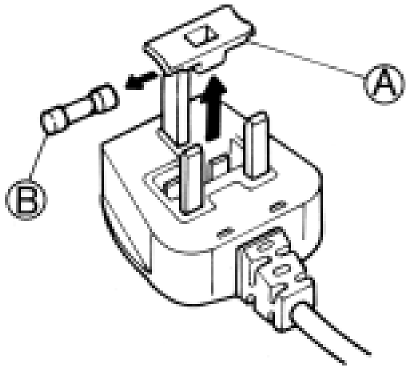


### For Great Britain only

### Warning - this appliance must be earthed

### Fuse replacement

If the mains lead of this appliance is fitted with a BS 1363A 13amp fused plug, to change a fuse in this type of plug use an A.S.T.A. approved fuse to BS 1362 type and proceed as follows:

**1.** Remove the fuse cover (**A**) and fuse (**B**).
**2.** Fit replacement 13A fuse into fuse cover.
**3.** Refit both into plug.

**Important:**

The fuse cover must be refitted when changing a fuse and if the fuse cover is lost the plug must not be used until a correct replacement is fitted.

Correct replacement are identified by the colour insert or the colour embossed in words on the base of the plug.

Replacement fuse covers are available from your local electrical store.

### For the Republic of Ireland only

The information given in respect of Great Britain will frequently apply, but a third type of plug and socket is also used, the 2-pin, side earth type.

### Socket outlet / plug (valid for both countries)

If the fitted plug is not suitable for your socket outlet, Please contact Whirlpool Service for further instruction. Please do not attempt to change plug yourself. This procedure needs to be carried out by a qualified Whirlpool technician in compliance with the manufactures instructions and current standard safety regulations.